bürkert
FLUID CONTROL SYSTEMS

2/2-way Angle-Seat Valve for medium up to +180 °C, DN 15-50

- High flow rates
- Very high cycle life
- Clamp body according to EN ISO 2852, BS 4825 or ASME BPE
- Deliverable with flow direction below or above seat
- Simple conversion of the circuit function

Type 2000 can be combined with…

Type 8691
Control head

Type 8690
Pneum. control unit with feedback

Type 1062
Electrical position feedback

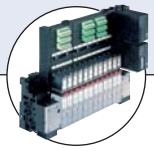

Type 8640/8644
Valve block

Type 6012/6014 P
Pilot valve

The externally piloted angle-seat valve is operated with a single or double-acting piston actuator. The actuator is available in two different materials, PA and PPS depending on the ambient temperature. The reliable self-adjusting packing gland provides high sealing integrity. High flow rates are attained with the stainless steel 2-way body.
These maintenance-free and robust valves can be retrofitted with a comprehensive range of accessories for position indication, stroke limitation or manual override.
For valves with port connection threaded port and weld end please see separate datasheets.

[1] **Note**: For PA actuators in the sizes 50 and 63, the combination of max. medium temperature and max. ambient temperature is as shown in the following chart

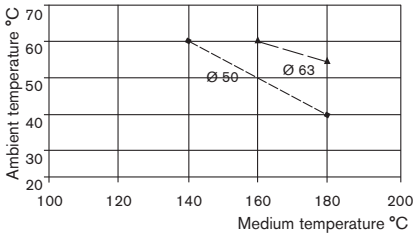

Technical data	
Orifice	DN15 to 50
Body materials	Stainless steel 316L
Actuator material	PA (PPS on request)
Seal material	PTFE (NBR, FKM, EPDM on request)
Medium	Water, alcohol, oils, fuel, hydraulic fluids, salt solution, alkali solutions, organic solvents, steam
Viscosity	Max. 600 mm²/s
Packing gland (with silicone grease)	PTFE V-rings with spring compensation
Medium temperature[1]	-10 to +180 °C with PTFE seal
Ambient temperature	
PA actuator[1]	-10 to +60 °C
PPS actuator[1] Ø 50-80	+5 to +140 °C
PPS actuator[1] Ø 100-125	+5 to +90 °C
Installation	As required, preferably with actuator in upright position
Control medium	Neutral gases, air
Max. pilot pressure	
Actuator size Ø 50-80	PA and PPS 10 bar
Actuator size Ø 100	PA 10 bar
Actuator size Ø 100	PPS 7 bar
Actuator size Ø 125	PA and PPS 7 bar
Port connection acc. on request	EN ISO 2852, BS 4825, ASME BPE DIN 32676
Surface finish on request	Standard Ra, internal ≤ 3.2 µm Int. Ra ≤ 0.8 µm (external cast surface) electropolished Int. Ra ≤ 0.4 µm (external cast surface) electropolished

Content

Valve specifications		System spec. On/Off Classic		Request for quotation	
Type 2000 clamp		Type 8801-YA/ 8803-YA		Type 8801-YA/ 8803-YA	
Technical data & ordering info.	p. 1-6	Ordering info. & technical data	p. 7-10		p. 11

DTS 1000100702 EN Version: L Status: RL (released | freigegeben | validé) printed: 03.11.2011

Materials Type 2000 clamp

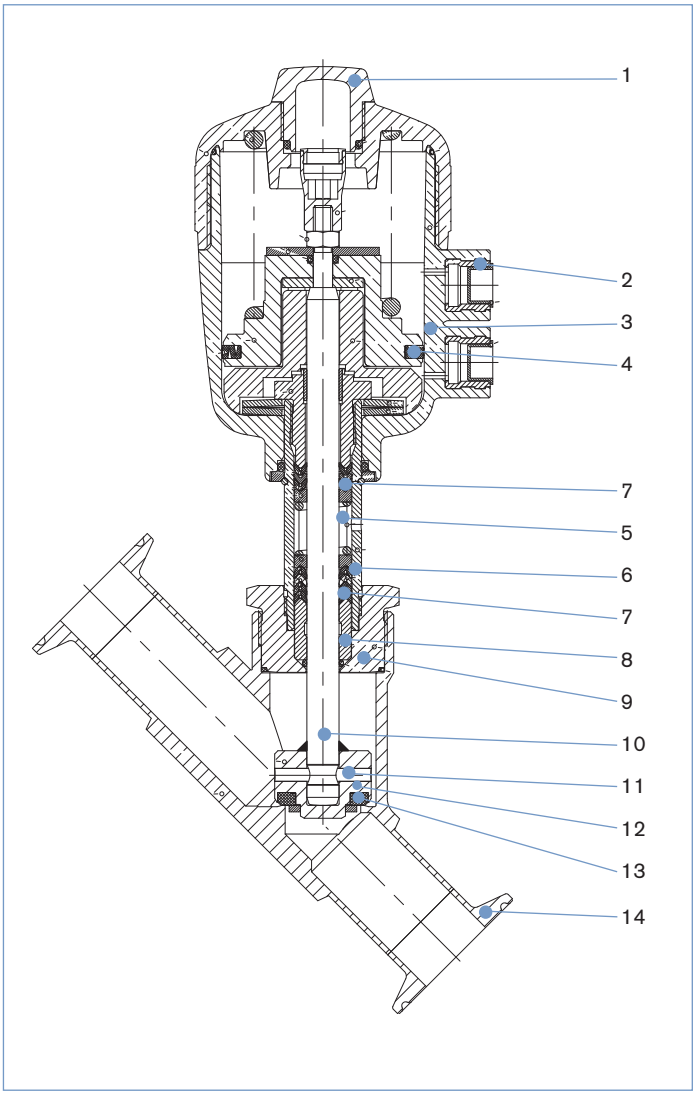

1	Transparent cap	PC (with PPS actuator; PSU)
2	Pilot air ports	Stainless steel 1.4305
3	Actuator	PA (PPS on request)
4	Piston seal	NBR (with PPS actuator; FKM)
5	Spring	Stainless steel 1.4310
6	Tube	Stainless steel 1.4401
7	V-Seals	PTFE (FKM on request)
8	Wiper	PTFE
9	Nipple	Stainless steel 1.4401
10	Spindle	Stainless steel 1.4401
11	Pins	Stainless steel 1.4401
12	Swivel plate	Stainless steel 1.4401
13	Seal	PTFE (NBR, FKM, EPDM on request)
14	Valve body	Stainless steel 316L

DTS 1000100702 EN Version: L Status: RL (released | freigegeben | validé) printed: 03.11.2011

Technical data for Type 2000 clamp with flow direction below seat (for gas and liquid)

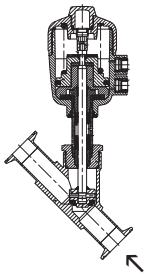

Flow direction below seat

Orifice [mm]	Actuator size [mm]	Kv value water (m^3/h)	Min. pilot pressure CFA [bar]	Max. operating pressure up to +180° CFA [bar]	CFB [bar]	Weight [kg]
15	50	4.2	3.9	16	16	0.8
20	50	8.0	3.9	11	16	1.0
25	50	14.5	–	–	16	1.2
	63	19	4.2	11	16	1.8
32	63	27	4.2	6	16	2.3
	80	28	5.0	14	16	3.1
40	63	35	–	–	16	2.7
	80	38	5.0	9	16	3.5
50	63	49	–	–	13	4.0
	100	55	4.4	7.2	–	7.0

Kv value water [m^3/h]: Measured at +20 °C, 1 bar pressure at valve inlet and free outlet
Pressure values [bar]: Measured as overpressure to the atmospheric pressure

Pilot pressure diagram with control function B and flow direction below seat

Diagram 1

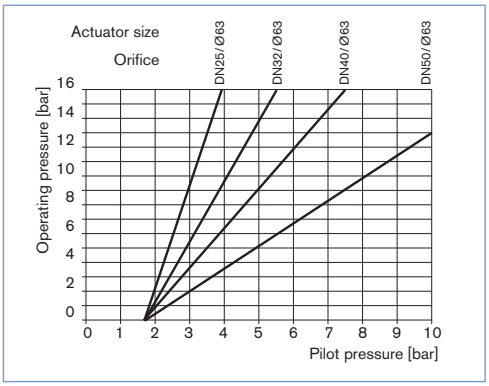

Diagram 2

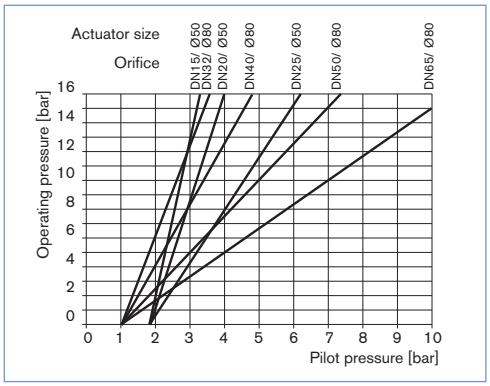

Ordering chart for valves with flow direction below seat (further versions on request)

Valves with clamp connection acc. to ISO 2852, ASME BPE or BS 4825, body in stainless steel, actuator material PA, Ra internal ≤ 3.2 µm

Control function	Orifice [mm]	Actuator size ø [mm]	Port connection Clamp external Ø [mm] ISO 2852	ASME BPE	BS 4825	Min. pilot pressure [bar]	Operating pressure up to 180 °C [bar]	Item no. ISO 2852	ASME BPE	BS 4825
A 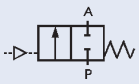	15	50	34.0	25.0	25.0	3.9	16	415 070	175 574	183 245
	20	50	50.5	25.0	25.0	3.9	11	415 071	175 575	183 246
	25	63	50.5	50.5	50.5	4.2	11	415 072	175 576	175 576
	32	80	50.5	–	–	5	14	415 073	–	–
	40	80	64.0	50.5	50.5	5	9	415 074	175 579	175 579
	50	100	77.5	64.0	64.0	4.4	7.2	415 075	175 580	175 580
B 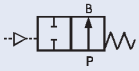	15	50	34.0	25.0	25.0	see diagram 1 and 2 above	16	415 076		
	20	50	50.5	25.0	25.0		16	415 077		
	25	50	50.5	50.5	50.5		16	415 078		
	32	63	50.5	–	–		16	415 079		
	40	63	64.0	50.5	50.5		16	415 080		
	50	63	77.5	64.0	64.0		13	415 081		

Further versions on request

Material
Seal: NBR, FKM, EPDM
Actuator: PPS

Port connections
Clamp acc. DIN 32676,
Weld end, threaded port

Additional
Surface finish: int. Ra ≤ 0.8 µm electro polished,
int. Ra ≤ 0.4 µm electro polished

Control function
Double-acting actuator

Approvals
GL, SIL

DTS 1000100702 EN Version: L Status: RL (released | freigegeben | validé) printed: 03.11.2011

Technical data for Type 2000 clamp with flow direction above seat (only for gas and steam)

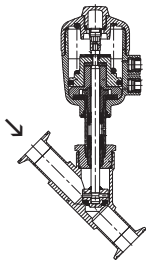

Flow direction above seat

Orifice [mm]	Actuator size [mm]	Kv value water (m^3/h)	Max. operating pressure up to +180°	Weight [kg]
15	50	4.2	16	0.8
20	50	8.0	16	1.0
25	63	19.0	16	1.8
32	63	27.0	16	2.2
40	63	35.0	16	2.7
50	63	49.0	16	4.0

Kv value water [m^3/h]: Measured at +20 °C, 1 bar pressure at valve inlet and free outlet
Pressure values [bar]: Measured as overpressure to the atmospheric pressure

Attention!
Valves with flow direction above the seat are only conditionally usable for liquid medium .
There is a danger of waterhammer!

Pilot pressure diagram with control function A and flow direction above seat

Diagram 3

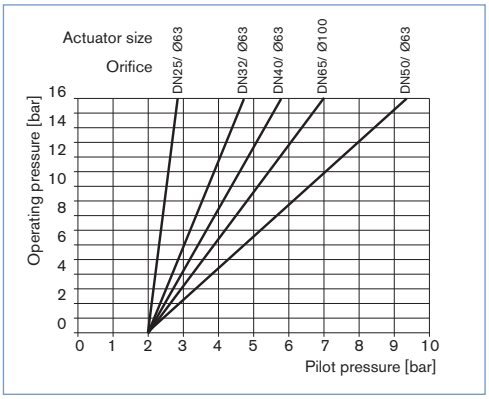

Diagram 4

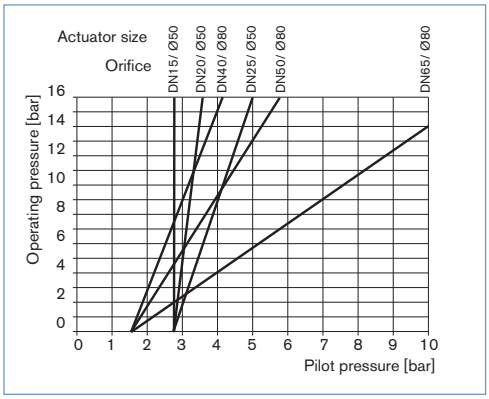

Ordering chart for valves with flow direction above seat (further versions on request)

Valves with clamp connection acc. to ISO 2852, ASME BPE or BS 4825, body in stainless steel, actuator material PA, Ra internal ≤ 3.2 µm

Control function	Orifice [mm]	Actuator size ø [mm]	Port connection Clamp external Ø [mm]			Min. pilot pressure [bar]	Operating pressure up to 180 °C [bar]	Item no.		
			ISO 2852	ASME BPE	BS 4825			ISO 2852	ASME BPE	BS 4825
A	15	50	34.0	25.0	25.0	see diagram 3 and 4 above	16	415 082	183 247	183 249
	20	50	50.5	25.0	25.0		16	415 083	183 248	183 264
	25	63	50.5	50.5	50.5		16	415 084	183 265	183 265
	32	63	50.5	–	–		16	415 085	–	–
	40	63	64.0	50.5	50.5		16	415 086	183 266	183 266
	50	63	77.5	64.0	64.0		16	415 087	183 267	183 267

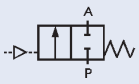

Further versions on request

Material
Seal: NBR, FKM, EPDM
Actuator: PPS

Port connections
Clamp acc. DIN 32676,
Weld end, threaded port

Additional
Surface finish: int. Ra ≤ 0.8 µm electro polished,
int. Ra ≤ 0.4 µm electro polished

Control function
Double-acting actuator

Approvals
GL, SIL

DTS 1000100702 EN Version: L Status: RL (released | freigegeben | validé) printed: 03.11.2011

Ordering chart for accessories

3/2-way pilot valves with banjo bolts

Seal material valve FKM, seal material banjo bolt NBR

Valve for actuator size [Ø mm]	Type	Pressure inlet P (valve body)	Service port A (banjo bolt)	Orifice [mm]	QNn value air [l/min]	Pressure range [bar]	Electrical coil connection Ind. Std.	Power consumption [W]	Item no. Voltage/ frequency [V/Hz] 024/DC	230/50
50-63	6012P	Tube fitting ø6 mm	G 1/4	1.2	48	0-10	Form B	4	552 283	552 286
50-125	6014P	G 1/4	G 1/4	2	120	0-10	Form A	8	424 103	424 107

Cable plug Type 2507, Form B or Type 2508, Form A

	Item no.
Type 2507, Form B Industrial standard, 0 to 250 V without circuitry (Type 6012 P)	423 845
Type 2508, Form A acc. DIN EN 175301-803, 0 to 250 V without circuitry (Type 6014 P, Type 0331P)	008 376

For further accessories see datasheet for Type 1062 or the accessories datasheet Type 2XXX for the full options programme.

Note: For design reasons, some of the accessories cannot be supplied for actuator size Ø 40 mm. Please request the accessories datasheet Type 2XXX.

Dimensions Type 2000 clamp [mm]

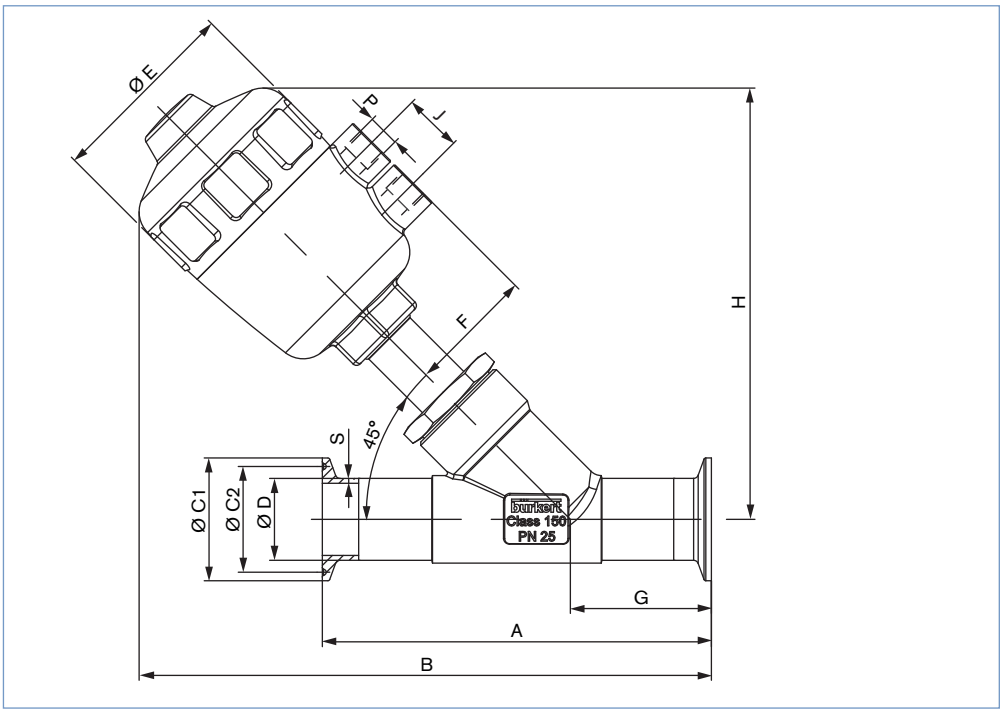

Dimensions according to EN ISO 2852 [mm]

DN [mm]	Actuator size Ø	Ø E	H	F	P	J	A	B	Ø C1	Ø C2	Ø D	G	S
15	50	64	145	44	G 1/4	24	130	194	34.0	27.5	21.3	49	1.6
20	50	64	149	44	G 1/4	24	150	205.5	50.5	43.5	26.9	56.5	1.6
25	50	64	152	44	G 1/4	24	160	210	50.5	43.5	33.7	58	2
	63	80	178	52	G 1/4	24	160	236	50.5	43.5	33.7	58	2
32	63	80	188	52	G 1/4	24	180	245.5	50.5	43.5	42.4	57.5	2
	80	101	209	60	G 1/4	24	180	266.5	50.5	43.5	42.4	57.5	2
40	63	80	191	52	G 1/4	24	200	260	64	56.5	48.3	69	2
	80	101	213	60	G 1/4	24	200	282	64	56.5	48.3	69	2
50	63	80	209	52	G 1/4	24	230	286.5	77.5	70.5	60.3	77.5	2.6
	100	127	277	73	G 1/4	30	230	354.5	77.5	70.5	60.3	77.5	3.6

DTS 1000100702 EN Version: L Status: RL (released | freigegeben | validé) printed: 03.11.2011

Dimensions Type 2000 clamp [mm], continued

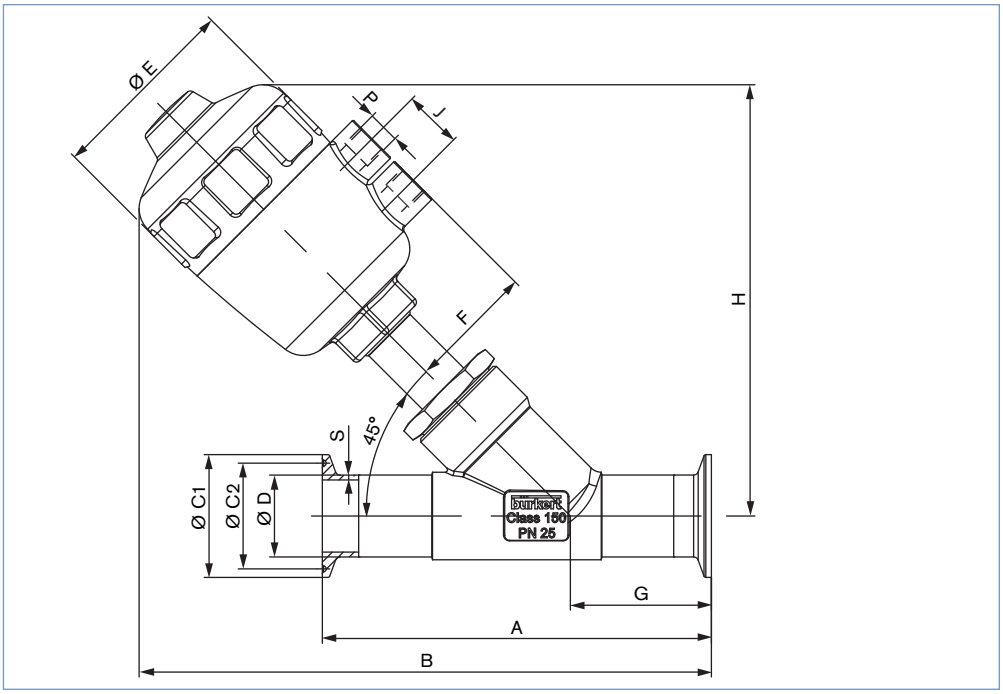

Dimensions according to ASME BPE [mm]

DN [mm]	Actuator size Ø	Ø E	H	F	P	J	A	B	Ø C1	Ø C2	Ø D	G	S
15	50	64	145	44	G 1/4	24	130	194	25.2	20.2	12.7	49	1.65
20	50	64	149	44	G 1/4	24	150	205.5	25.2	20.2	19.05	56.5	1.65
25	50	64	152	44	G 1/4	24	160	210	50.5	43.5	25.4	58	1.65
	63	80	178	52	G 1/4	24	160	230	50.5	43.5	25.4	58	1.65
40	63	80	191	52	G 1/4	24	200	260	50.5	43.5	38.1	69	1.65
	80	101	213	60	G 1/4	24	200	282	50.5	43.5	38.1	69	1.65
50	63	80	209	52	G 1/4	24	230	286.5	64.0	56.5	50.8	77.5	1.65
	100	127	277	73	G 1/4	30	230	354.5	64.0	56.5	50.8	77.5	1.65

Dimensions according to BS 4825 [mm]

DN [mm]	Actuator size Ø	Ø E	H	F	P	J	A	B	Ø C1	Ø C2	Ø D	G	S
15	50	64	145	44	G 1/4	24	130	194	25.2	20.2	12.7	49	1.2
20	50	64	149	44	G 1/4	24	150	205.5	25.2	20.2	19.05	56.5	1.2
25	50	64	152	44	G 1/4	24	160	210	50.5	43.5	25.4	58	1.65
	63	80	178	52	G 1/4	24	160	236	50.5	43.5	25.4	58	1.65
40	63	80	191	52	G 1/4	24	200	260	50.5	43.5	38.1	69	1.65
	80	101	213	60	G 1/4	24	200	282	50.5	43.5	38.1	69	1.65
50	63	80	209	52	G 1/4	24	230	286.5	64.0	56.5	50.8	77.5	1.65
	100	127	277	73	G 1/4	30	230	354.5	64.0	56.5	50.8	77.5	1.65

Dimensions according to DIN 32676 [mm]

DN [mm]	Actuator size Ø	Ø E	H	F	P	J	A	B	Ø C1	Ø C2	Ø D	G	S
15	50	64	145	44	G 1/4	24	130	194	34.0	27.5	19.0	49	1.5
20	50	64	149	44	G 1/4	24	150	205.5	34.0	27.5	23.0	56.5	1.5
25	50	64	152	44	G 1/4	24	160	210	50.5	43.5	29.0	58	1.5
	63	80	178	52	G 1/4	24	160	236	50.5	43.5	29.0	58	1.5
32	63	80	188	52	G 1/4	24	180	245.5	50.5	43.5	35.0	57.5	1.5
	80	101	209	60	G 1/4	24	180	266.5	50.5	43.5	35.0	57.5	1.5
40	63	80	191	52	G 1/4	24	200	260	50.5	43.5	41.0	69	1.5
	80	101	213	60	G 1/4	24	200	282	50.5	43.5	41.0	69	1.5
50	63	80	209	52	G 1/4	24	230	286.5	64.0	56.5	53.0	77.5	1.5
	100	127	277	73	G 1/4	30	230	354.5	64.0	56.5	53.0	77.5	1.5

DTS 1000100702 EN Version: L Status: RL (released | freigegeben | validé) printed: 03.11.2011

bürkert

Ordering information for valve system On/Off Classic Type 8801-YA/8803-YA

A **valve system On/Off Classic Type 8801-YA/8803-YA** consists of an angle-seat valve **Type 2000** and a valve actuation system control head **Type 8691**, a pneumatic control unit **Type 8690** or an electrical position feedback **Type 1062** (see separate datasheets).
For the configuration of further valve systems please use the "Request for quotation" on p. 11 go to page
You order two components and receive a complete assembled and certified valve.

Ordering the valve system On/Off Classic Type 8801-YA/8803-YA

Angle-seat valve
Type 2000 clamp

Control units

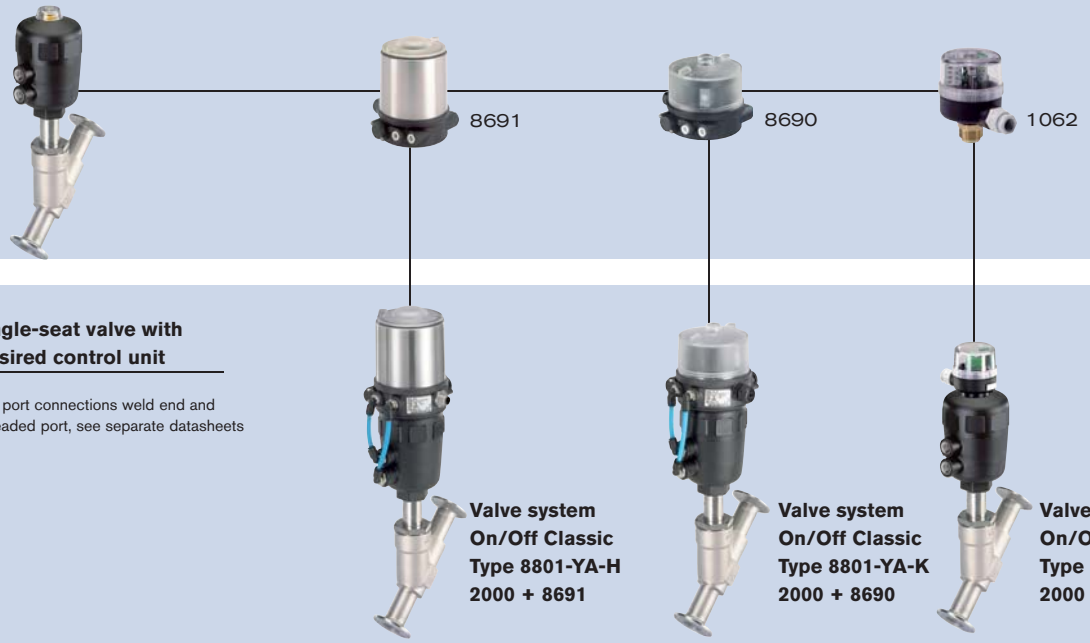

Angle-seat valve with desired control unit

For port connections weld end and threaded port, see separate datasheets

Valve system On/Off Classic Type 8801-YA-H 2000 + 8691

Valve system On/Off Classic Type 8801-YA-K 2000 + 8690

Valve system On/Off Classic Type 8803-YA 2000 + 1062

When you click on the orange box "More info." below, you will come to our website for the resp. product where you can download the datasheet.

Control head Type 8691

More info.

AS-i DeviceNet™

The new generation of integrated control heads for combination with actuators from the process valve series Type 20xx/21xx is specially designed for the requirements of hygienic process environments. The intelligent control head, Type 8691, detects the valve position by means of a contact-free analog position sensor circumventing excessive wear of mechanical parts. Single or double-acting actuators are controlled via the integral pilot valve. Communication interfaces AS-Interface and DeviceNet are available as options.

Main customer benefits:
- Automatic setting of the control head at the push of a button
- Even under dirty or dark environments, a clearly visible status display due to powerful LEDs
- Monitoring and diagnosis: Process valve systems with field bus interface used in modern plant processes
- Integrated pilot valve with manual actuation
- Air intake filter enhances the process valve system availability
- Simple and reliable actuator adaptations allowing additional actuators of the process valve series, Type 20xx or actuators from other manufacturers to be used

Pneumatic control unit Type 8690

More info.

The new generation of integrated controllers for combination with actuators from the process valve series Type 20xx/21xx is specially designed for the requirements of hygienic process environments.
The pneumatic control unit Type 8690 combines electrical position feedback and pneumatic control for single or double-acting actuators, and is also optionally available as an intrinsically safe model to ATEX.

Main customer benefits:
- Integrated pilot valve with manual actuation
- Air intake filter enhances the process valve system availability
- Simple and reliable actuator adaptations allowing additional actuators of the process valve series, Type 20xx or actuators from other manufacturers to be used

Electrical Position Feedback Type 1062

More info.

Positions are electrically signalized according to switch type:
- open,
- closed or
- open and closed.

LEDs provide optical position indication (except for Namur Ex-version). Mechanical or inductive switches are housed in a compact splash-proof enclosure. The position indicator can be rotated 360° and is easily fitted to the valve. Trip cams do not require adjustment. The unit only needs to be screwed on and connected to be ready for operation.

DTS 1000100702 EN Version: L Status: RL (released | freigegeben | validé) printed: 03.11.2011

Dimensions for valve system On/Off Classic Type 8801-YA-H [mm]

Dimensions valve system On/Off Classic Type 8801-YA-H with TopControl Type 8691 [mm]

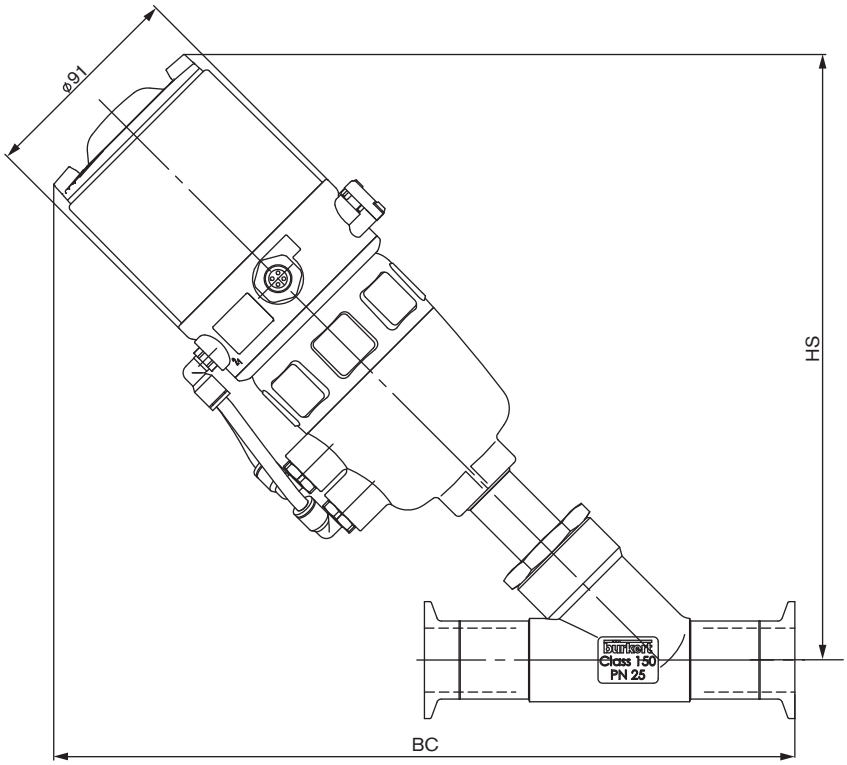

Acc. ISO 2852, BS 4825, ASME BPE, DIN 32676

Orifice [mm]	Actuator size [mm]	HS [mm]	BC [mm]
13	50	234	283.5
20	50	238	295
	63	261.5	318.5
25	50	241	299.5
	63	263.5	322
	80	278.5	337
32	63	273.5	331.5
	80	289.5	347.5
40	63	276.5	346
	80	293.5	363
	100	337.5	407
	125	360.5	430
50	63	294.5	372.5
	80	310.5	388.5
	100	351.5	429.5
	125	374.5	452.5

DTS 1000100702 EN Version: L Status: RL (released | freigegeben | validé) printed: 03.11.2011

Dimensions for valve system On/Off Classic Type 8801-YA-K [mm]

Dimensions valve system On/Off Classic Type 8801-YA-K with TopControl Type 8690 [mm]

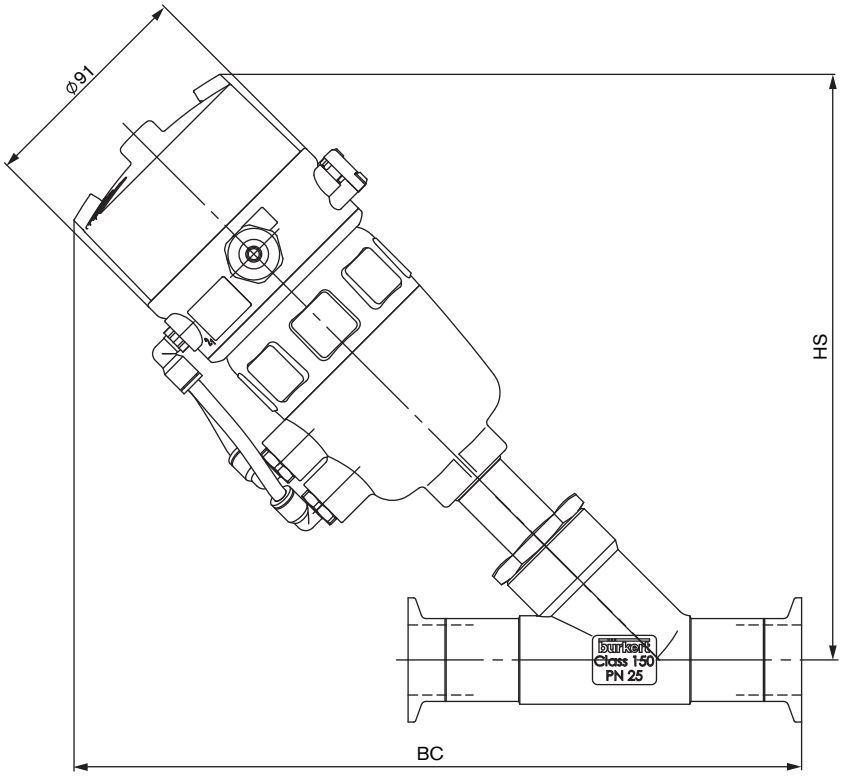

Acc. ISO 2852, BS 4825, ASME BPE, DIN 32676

Orifice [mm]	Actuator size [mm]	HS [mm]	BC [mm]
13	50	210	259.5
20	50	214	271
	63	238	295
25	50	217	275,5
	63	239	298.5
	80	254.5	313
32	63	250	308
	80	265.5	323.5
40	63	253	322.5
	80	269.5	339
	100	313.5	383
	125	336.5	406
50	63	271	349
	80	286.5	364.5
	100	327.5	405.5
	125	350.5	428.5

DTS 1000100702 EN Version: L Status: RL (released | freigegeben | validé) printed: 03.11.2011

Dimensions for valve system On/Off Classic Type 8803-YA [mm]

Dimensions valve system On/Off Classic Type 8803-YA with electrical position feedback Type 1062 [mm]

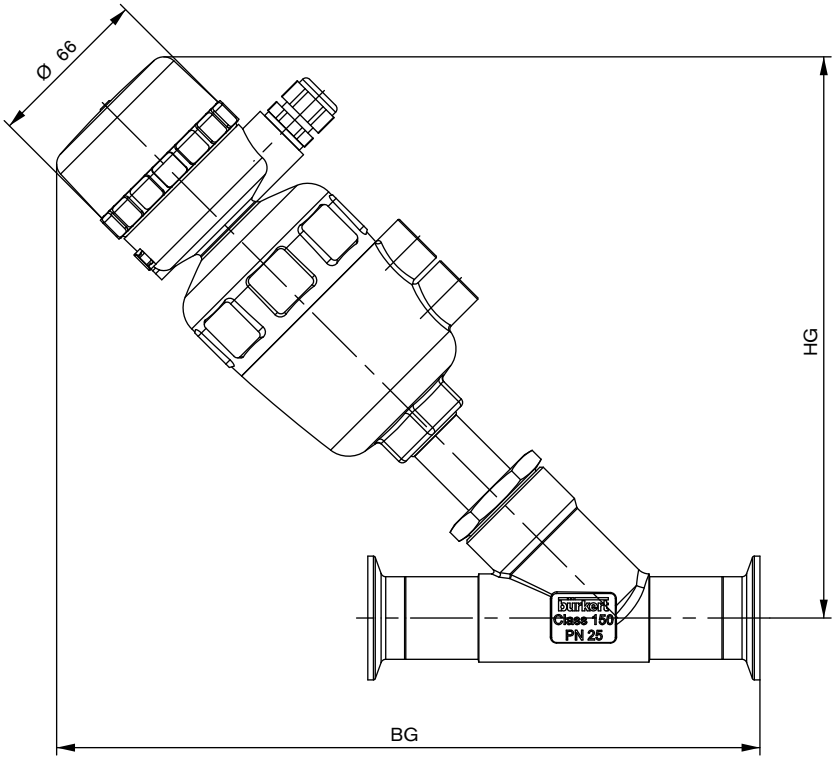

Acc. to EN ISO 2852 [mm]

Orifice [mm]	Actuator size ø [mm]	HG [mm]	BG [mm]
15	50	200	249
20	50	204	261
25	50	207	265
	63	230	288
32	63	240	298
	80	255	313
40	63	243	312
	80	259	328
50	63	261	339
	100	319	397

Acc. to ASME BPE and BS 4825 [mm]

Orifice [mm]	Actuator size ø [mm]	HG [mm]	BG [mm]
15	50	200	249
20	50	204	261
25	50	207	265
	63	230	288
40	63	243	312
	80	259	328
50	63	261	339
	100	319	397

DTS 1000100702 EN Version: L Status: RL (released | freigegeben | validé) printed: 03.11.2011

bürkert

Note
You can fill out the fields directly in the PDF file before printing out the form.

Valve system On/Off Classic Type 8801-YA/8803-YA – request for quotation

Please fill out and send to your nearest Bürkert facility* with your inquiry or order

Company	Contact person
Customer no.	Department
Address	Tel./Fax
Postcode/town	E-Mail

■ = mandatory fields to fill out Quantity Required delivery date

Operating data

Pipeline	DN		PN
Pipe material			
■ **Process medium**			
■ **Type of medium**	☐ Liquid	☐ Steam	☐ Gas
	standard	unit	
■ **Flow rate (Q, Q_N, W)** [1]			
■ **Temperature at valve inlet**			
■ **Absolute pressure at valve inlet**			

[1] standard unit: Liquid Q = m³/h; Steam W = kg/h; Gas Q_N = Nm³/h

Valve features

Actuator material	☐ PA		☐ PPS		
Body material	☐ Stainless steel		☐ Gunmetal		
Seat sealing material	☐ PTFE	☐ NBR	☐ Other		
Nominal pressure	PN				
Nominal size	DN				
Type of connection	☐ Welded	☐ Internal thread	☐ Clamp		
Standard connection	☐ ISO	☐ DIN	☐ ANSI	☐ JIS	☐ Other
Function	☐ NC[2]	☐ NO [2]	☐ Double-acting		
Pilot pressure	min.		max.		

[2] NC: normally closed by spring action; NO: normally open by spring action

Control unit features

Click on the orange box "More info." below... you will come to our website for the resp. product where you can download the datasheet.

Pneumatic Control Unit

☐ **Type 8691** More info.

Pneumatic function
☐ Single-acting ☐ Double-acting

Pilot air ports
☐ Push-in connector external ø 6 mm or 1/4"
☐ Thread G 1/8"

Communication
☐ ASI
☐ Multipol M12
☐ Flat cable clip, 1 m cable
☐ DeviceNet

Please specify item no. if known:

Control Head

☐ **Type 8690** More info.

Pneumatic function
☐ Single-acting ☐ Double-acting
☐ Without pilot valve

Position feedback
☐ 1x inductive ☐ 2x inductive
☐ 1x inductive (NAMUR) ☐ 2x inductive (NAMUR)
☐ 1x mechanical ☐ 2x mechanical

Supply voltage
☐ 24 V / DC (ATEX Zone 2/22)
☐ Ex ia IIC T6 (ATEX Zone 1)

Pilot air ports
☐ Push-in connector external ø 6 mm or 1/4" ☐ Thread G 1/8"

Please specify item no. if known:

Electrical position feedback

☐ **Type 1062** More info.

Limit switches
☐ mechanical
☐ Voltage 12-48 V
☐ Voltage 110-250 V
☐ inductive
☐ NAMUR EExi

Status
☐ closed
☐ open
☐ open/closed

Please specify item no. if known:

continued on next page →

Reset form

* To find your nearest Bürkert facility, click on the orange box → www.burkert.com

DTS 1000100702 EN Version: L Status: RL (released | freigegeben | validé) printed: 03.11.2011

bürkert

Valve system On/Off Classic Type 8801-YA/8803-YA – request for quotation, *continued*

Control unit features

Pilot valve	Stroke limitation
☐ **Pilot valve**	☐ **Stroke limitation**
Power supply ☐	☐ **Min./max. stroke limitation,** with visual position indicator ☐ **Max. stroke limitation,** without visual position indicator
Please specify item no. if known: ☐	**Please specify item no. if known:** ☐

Certifications

- ☐ Attestation of compliance with the order EN-ISO 10204 2.1
- ☐ Test report EN-ISO 10204 2.2
- ☐ Certification of Conformity for Raw Material EN-ISO 10204 3.1
- ☐ EN161 (European Gas Device guideline)

Comment / sketch

Reset form

DTS 1000100702 EN Version: L Status: RL (released | freigegeben | validé) printed: 03.11.2011

Subject to alterations
© Christian Bürkert GmbH & Co. KG